S Pump Parts List

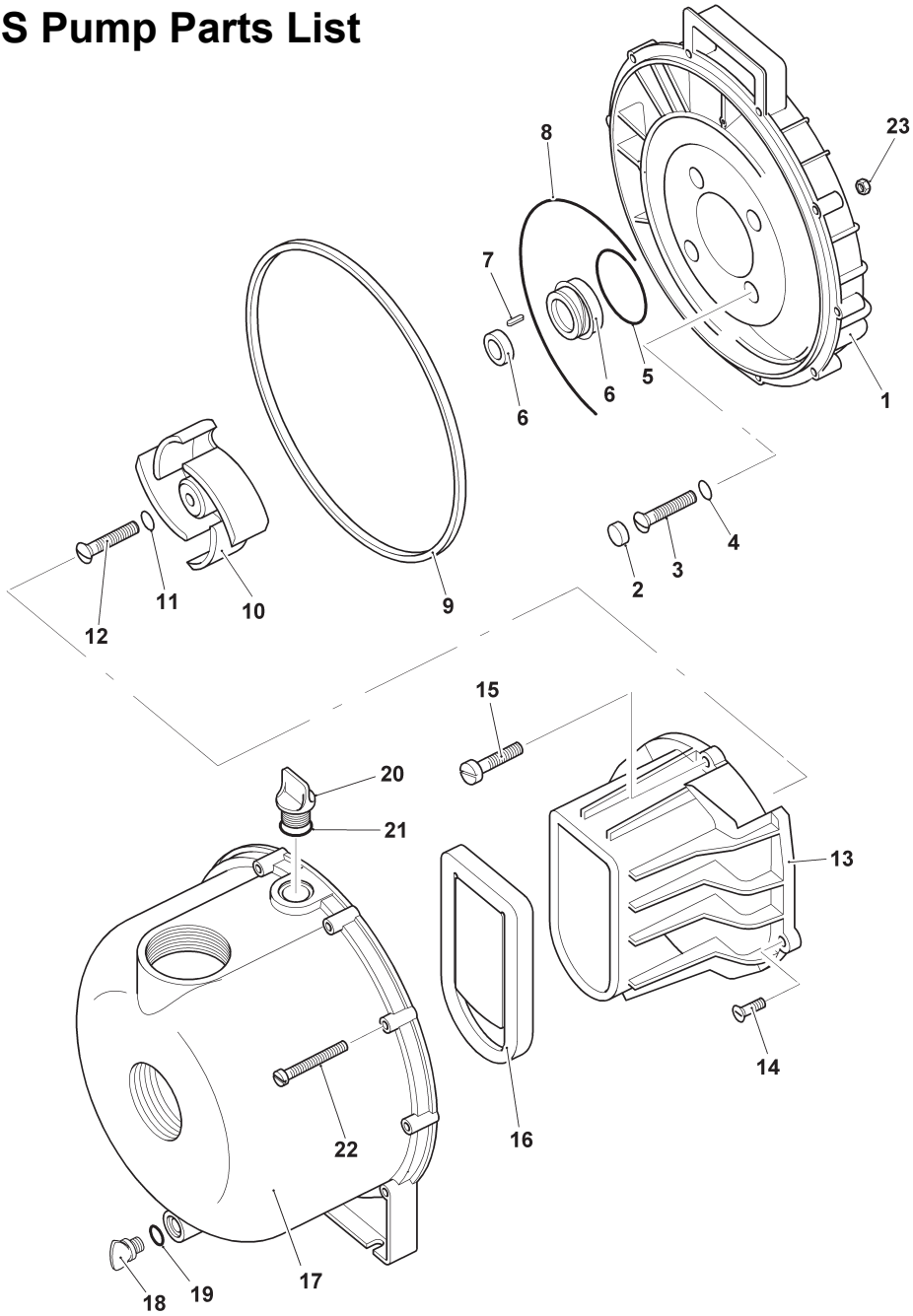

S Pump Parts List

Illustration Number	Description	Part Number	Quantity Required
1	Pump back plate (bracket) - Polyester (black) Pump back plate (bracket) - Polypropylene (grey)	9907-703-30 9907-703-40	1 1
2	Plug (Viton pumps only)	58-1750-90	4
3	Bracket screw, 5/16" x 1.25" stainless steel Bracket screw, 5/16" x 1.5", st/steel (pedestal mount)	9907-715-10 9907-728-10	4 4
4	O Ring, Buna * O ring, EPDM * O ring, Viton **	9907-717-71 9907-717-72 9907-717-73	4 4 4
5	O Ring shaft seal, Buna * O Ring shaft seal, EPDM * O Ring shaft seal, Viton *	9907-976-71 9907-976-72 9907-976-73	1 1 1
6	Shaft seal, Buna * Shaft seal, EPDM * Shaft seal, Viton ** (NB: Item 5 is included in the shaft seal kit, item 6).	9907-714-11 9907-714-12 9907-714-14	1 1 1
7	Shaft impeller key, mild steel Shaft impeller key, stainless steel	9907-0718-00 9907-0718-10	1 1
8	O ring segment, Buna * O ring segment, EPDM * O ring segment, Viton **	9907-754-71 9907-754-72 9907-754-73	1 1 1
9	O ring body, Buna * O ring body, EPDM * O ring body, Viton **	9907-719-71 9907-719-72 9907-719-73	1 1 1
10	Impeller (704) - Polyester (black) Impeller (706) - Polyester (black) Impeller (975) - Polyester (black) Impeller (975) - Polypropylene (grey)	9907-704-30 9907-706-40 9907-975-30 9907-975-40	1 1 1 1
11	O ring, Buna * O ring, EPDM * O ring, Viton **	9907-717-71 9907-717-72 9907-717-73	1 1 1
12	Impeller screw, stainless steel.	9907-716-10	1
13	Volute - Flat, for 704 & 706 impeller, polyester pump Volute - Ribbed, for 975 impeller, polyester pump Volute - Ribbed, for 975 impeller, polypropylene pump	9907-702-30 9907-977-30 9907-977-60	1 1 1
14	Volute screw, self tapping, stainless steel	9907-725-10	2
15	Volute top screw, for 977 volute Volute top screw, for 702 volute	9907-997-10 9907-771-10	1 1

Illustration Number	Description	Part Number	Quantity Required
16	Check valve, Buna *	9907-705-71	1
	Check valve, EPDM *	9907-705-72	1
	Check valve, Viton **	9907-705-73	1
17	Pump body, 2 inch - Polyester (black)	9907-1002-30	1
	Pump body, 2 inch BSP - Polyester (black)	9907-784-30B	1
	Pump body, 2 inch - Polypropylene (grey)	9907-1002-40	1
	Pump body, 3 inch - Polyester (black)	9907-755-30	1
	Pump body, 3 inch BSP - Polyester (black)	9907-877-30B	1
18	Drain plug - Polyester (black)	9907-723-30	1
	Drain plug - Polypropylene (grey)	9907-723-40	1
19	O ring, Buna *	9907-1009-71	1
	O ring, EPDM *	9907-1009-72	1
	O ring, Viton **	9907-1009-73	1
20	Filler plug - Polyester (black)	9907-722-30B	1
	Filler plug - Polypropylene (grey)	9907-722-40	1
21	O ring, Buna *	9907-765-71	1
	O ring, EPDM *	9907-765-72	1
	O ring, Viton **	9907-765-73	1
22	Body bolt, Polypropylene pump (black), st/steel.	9907-720-10	10
	Body bolt, Polyester pump (grey), zinc plated.	9907-720	10
23	Body nut, stainless steel.	9907-721-10	10
	Body nut, zinc plated.	9907-721	10
	Impeller shim, 0.007"	9907-788-11	AS REQ
	Impeller shim, 0.015"	9907-788-12	AS REQ
	Impeller shim, 0.030"	9907-788-13	AS REQ

* Polyester pump (black body) EPDM seals as standard, Buna & Viton options available
** Polypropylene pump (grey body) Viton seals as standard, Buna & EPDM options available

Repair kits

Part Number	Description	Included components
9907-KT001	Pedestal conversion kit	n/a
9907-KT014	Complete seal kit - Buna	4 - 5 - 6 - 8 - 9 - 11 - 16 - 19 - 21
9907-KT005	Complete seal kit - EPDM	
9907-KT017	Complete seal kit - Viton	
9907-KT024	Pump repair kit - Buna	4 - 5 - 6 - 7 - 8 - 11 - 12 - 14 - 15 19 - 21 - 3x shims - slinger ring shaft sleeve - shaft gasket
9907-KT025	Pump repair kit - EPDM	
9907-KT026	Pump repair kit - Viton	